Aircraft Identification Tag (AIT) Initial Feasibility Study – Equipment and Implementation Scenarios

Dieter Eier, Miodrag Sajatovic	**FREQUENTIS**
Thierry Virion	**SOFREAVIA**
Horst Hering	**EUROCONTROL Experimental Centre**
Frederic Daviere	**ROCKWELL-COLLINS**

FREQUENTIS
Corporate Research

Contents

- Aircraft Identification Tag (AIT)
- EUROCONTROL AIT Study
- AIT Operational Concept and Applications
- AIT Communications System
- Conclusions

Aircraft Identification Tag (AIT) Goals

→AIT is both a new operational concept and a technology

→Goals of the AIT concept:

1. Reduction of voice communication errors by allowing the controller to visually identify the aircraft that is currently using the voice channel.
2. Security improvement of controller-pilot voice communications by allowing authentication of received voice communications.

→This can be achieved by transferring "short" data messages over analog A/G VHF voice channels:

- Aircraft → Ground VCS → Ground ATC system
- Ground ATC system → Ground VCS → Aircraft

Enabling Technologies

- Speech watermarking
  - Developed by EUROCONTROL Experimental Centre (EEC) for ATC audio frequency band
  - Analog voice is digitized
  - AIT signal - “spread” over entire AF bandwidth - is added to voice
  - Composite audio signal is converted back to analog form and transmitted

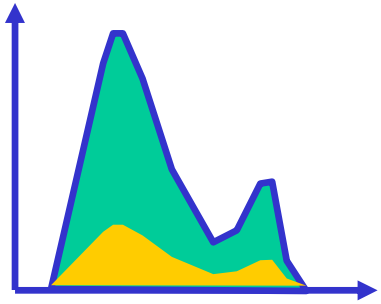

- Alternative in-band data technologies
  - Narrowband in-band modem (Data-in-Voice)

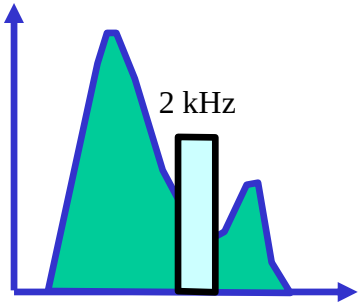

AIT Study

- AIT research project issued by EUROCONTROL
  - Phase 1: Initial feasibility assessment for AIT
  - Phase 2: Complete feasibility analysis
- Phase 1 team
  - SOFREAVIA
  - FREQUENTIS
  - ROCKWELL-COLLINS
- Study launched in July 2006, finalized in January 2007

AIT Study Phase 1 Objectives

1. Develop Operational Concept for candidate applications
   - How is AIT technology intended to be operationally used
2. Provide and initial assessment of technical feasibility
   - Evaluate AIT equipage options on ground/airborne architectures,
   - Propose and analyze deployment scenarios
3. Identify issues to be investigated in phase 2
4. Provide an initial AIT cost/benefits assessment

AIT Operational Concept and Applications

- Candidate AIT Applications:
  - **[OC1]** Identification of transmitting aircraft on the controller HMI
  - **[OC2]** Uplink of ATC identification
  - **[OC3]** Authentication of voice communications
  - **[OC4]** Channel equalization and bandwidth extension techniques
  - **[OC5]** Position reporting
- Operational concepts were developed for applications [OC1], [OC2] and [OC3]
- [OC4] and [OC5] were deemed immature (not recommended for further investigations)

AIT Communications System and Interfaces

IF	Items Exchanged
A1	User's voice
A2	User's voice containing AIT data items, error coding/parity & synchronization bits
A3	AIT data items, error coding/parity bits
A4	User data items

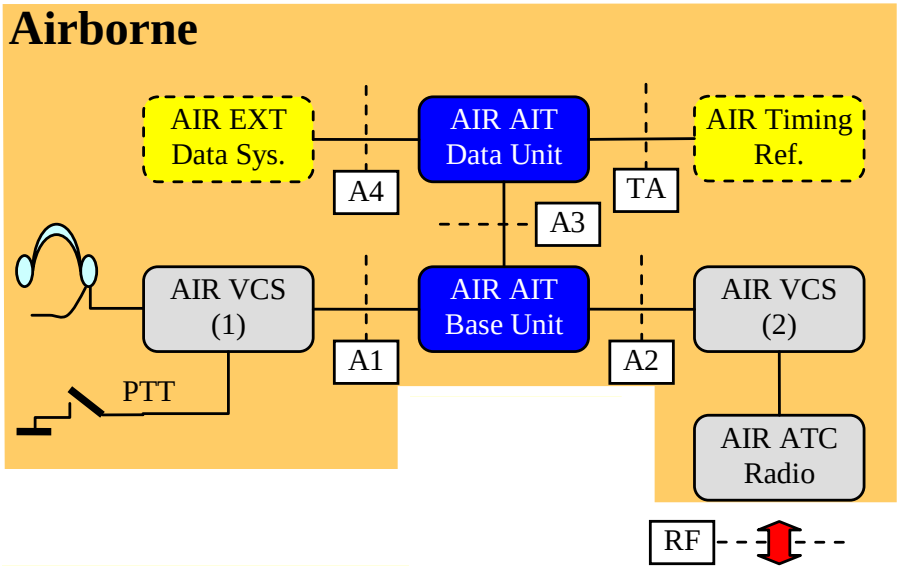

AIT Performance

Parameter	Prototype AIT System	Operational AIT System (estimate)
Excess delay for voice (ms)	30…60	≤20
AIT frame duration (s)	1	1
AIT user data rate (bps)	≤36	≥100
Available AF bandwidth (Hz)	300…3100	300..2500

→ Acceptable excess delay in prototype system

→ Improvements on user data rate possible

AIT Airborne Implementation

- Analysis of existing airborne voice systems
  - Large transport aircraft
  - General aviation (GA) aircraft - basic avionics
  - General aviation (GA) aircraft - advanced avionics
- All airborne systems consist of
  - VHF radio
  - Radio Control Panel (RCP)
  - Audio Control Panel (ACP) mostly connected to Audio Management Unit (AMU) or Radio Interface Units (RIU)

AIT Airborne Implementation

- AIT required Digital Signaling Processors (DSP) are available in:
  - Limited number of VHF radio products
  - Limited number of AMU/RIU products
- Two implementation options:
  - Headset implementation
  - Integrated Implementation

Airborne AIT "Headset" Implementation

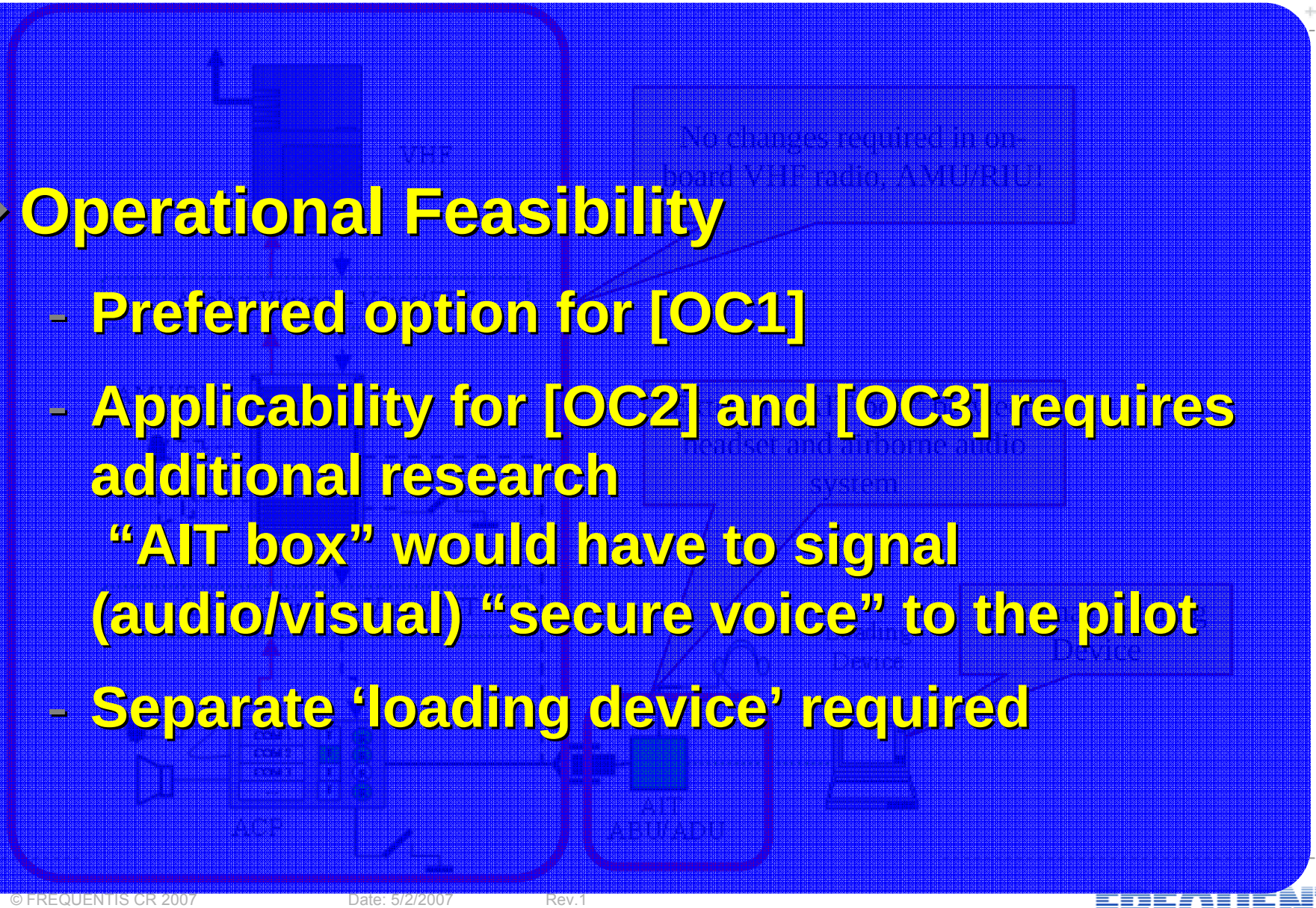

→ **Operational Feasibility**

- Preferred option for [OC1]
- Applicability for [OC2] and [OC3] requires additional research
  "AIT box" would have to signal (audio/visual) "secure voice" to the pilot
- Separate 'loading device' required

Integrated Airborne AIT Implementation

→ **Operational Feasibility**

- Supports [OC1]
- Required for [OC2] and [OC3]
- ‘Loading device’ required

FREQUENTIS

AIT Ground Implementation

- Two basic options for AIT integration within the ground infrastructure
  - “Stand-alone” option
  - “Integrated” option

AIT Ground Implementation – Stand Alone

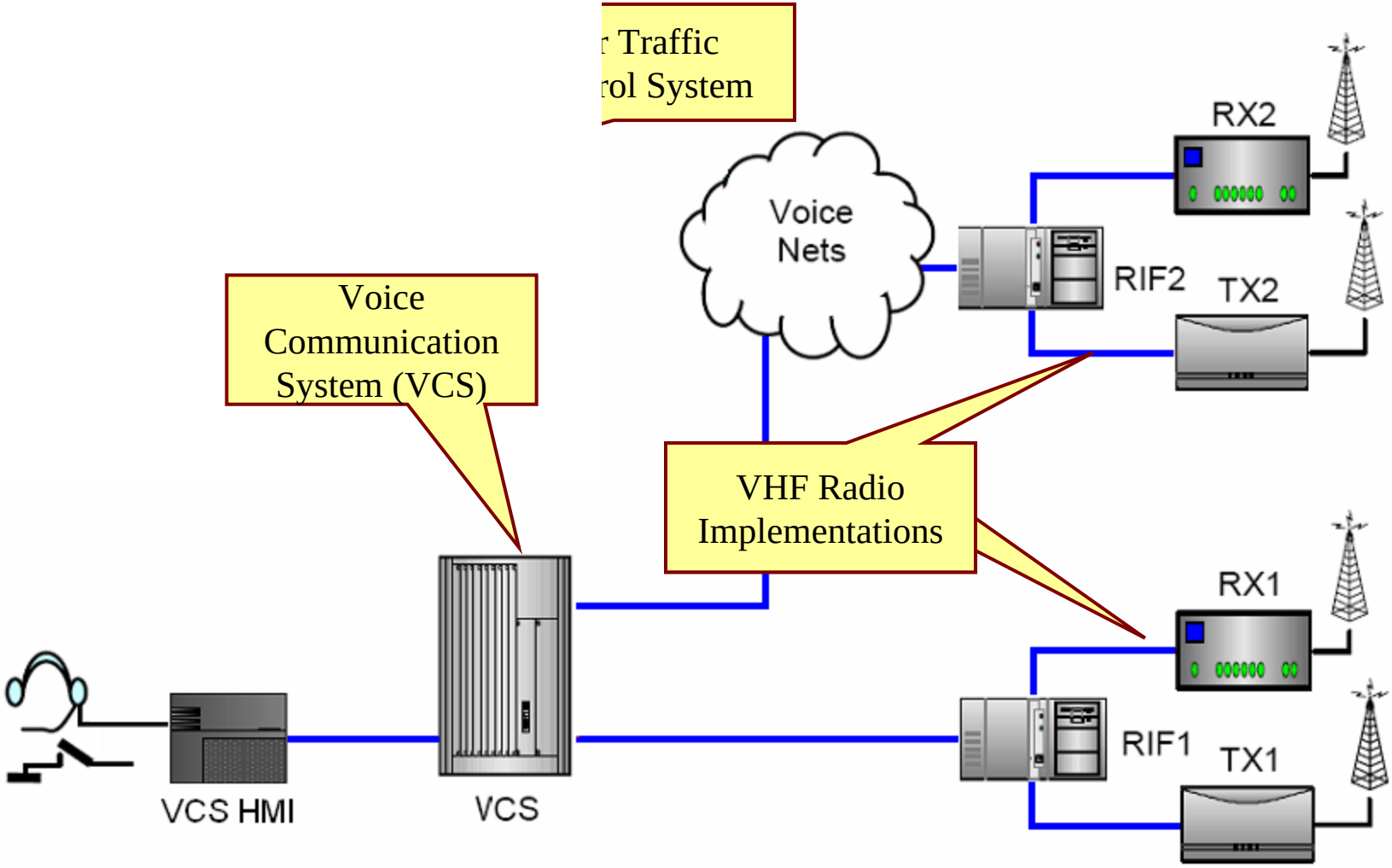

AIT Ground Implementation – Stand Alone

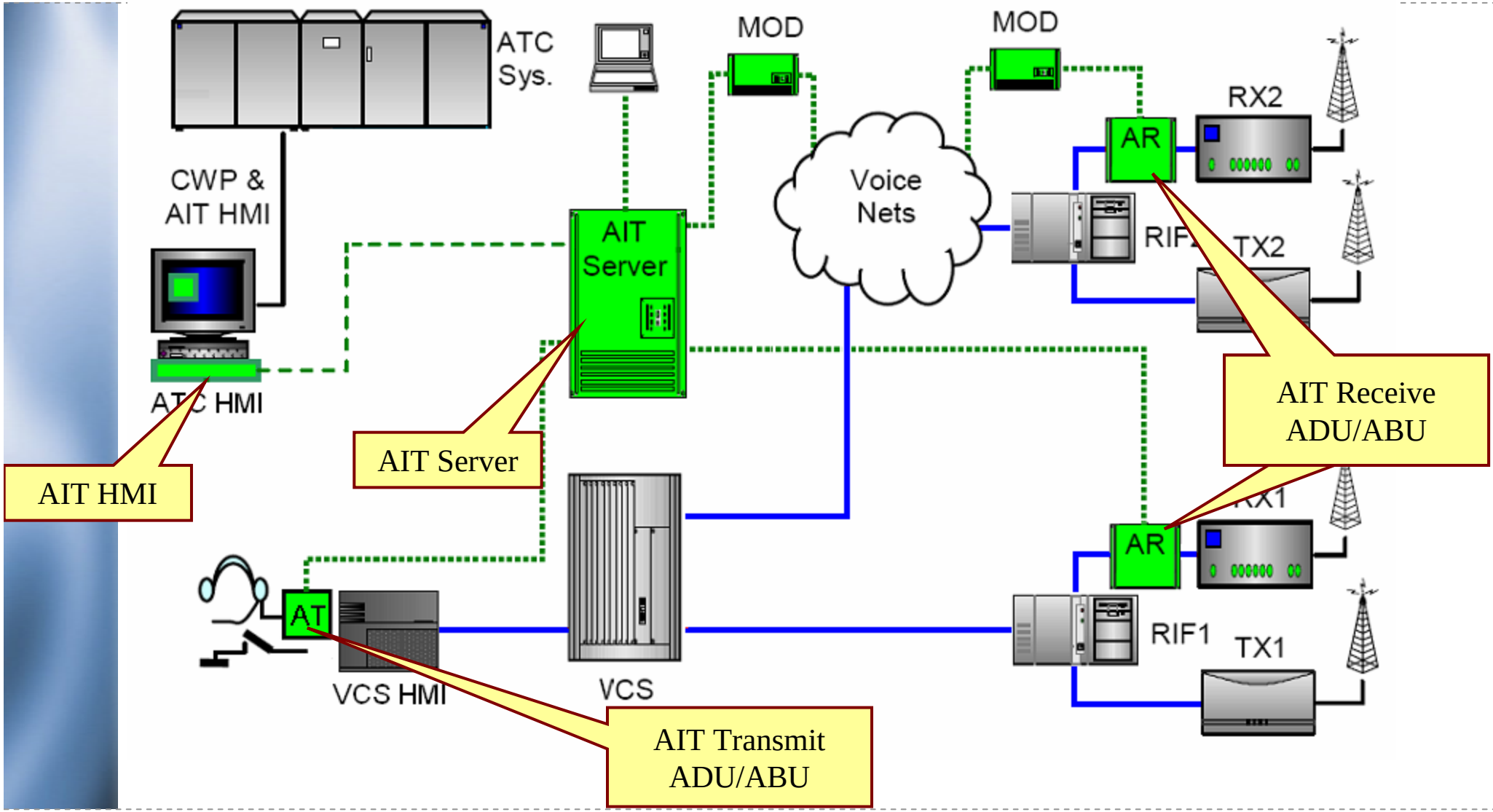

AIT Ground Implementation – Integrated

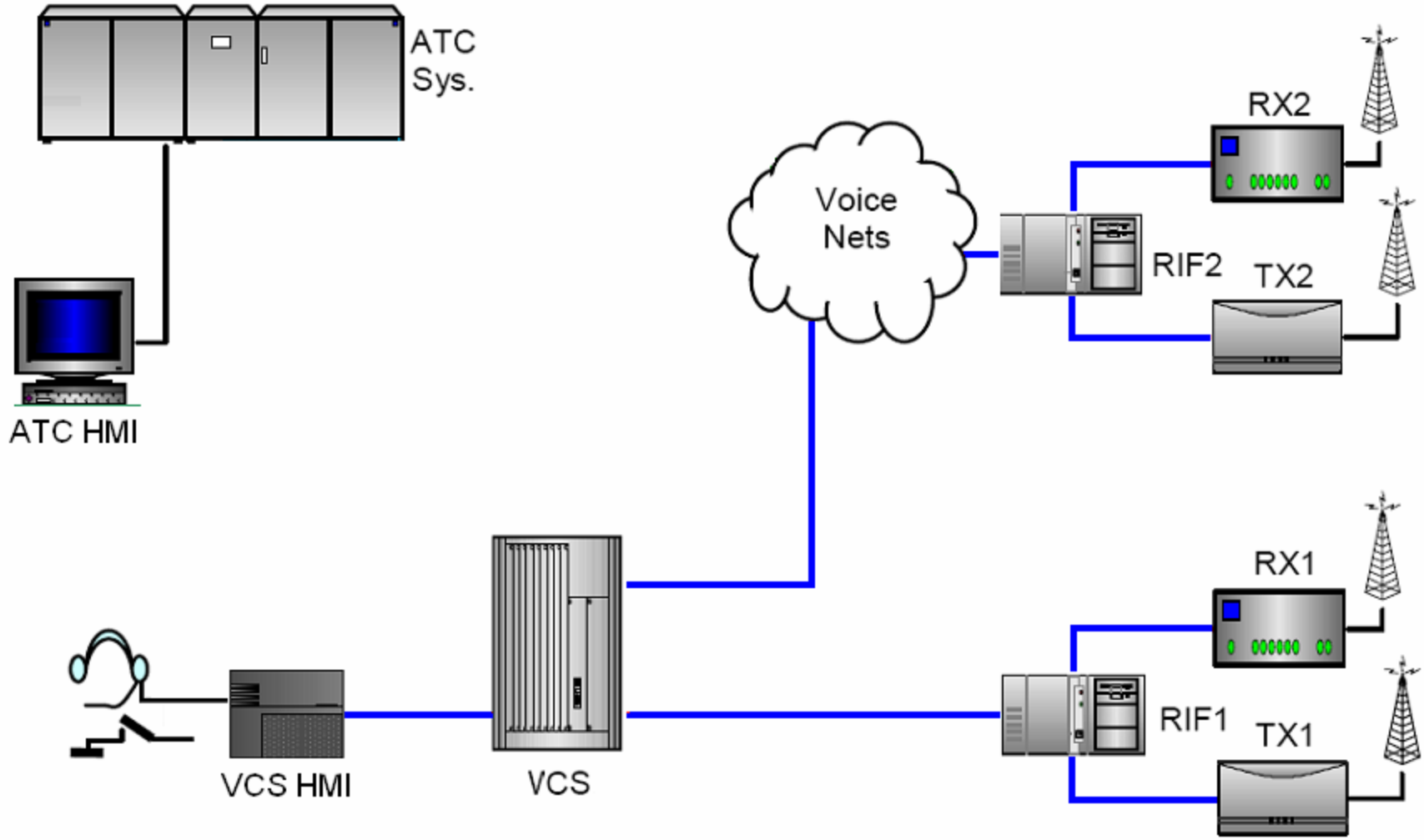

AIT Ground Implementation – Integrated

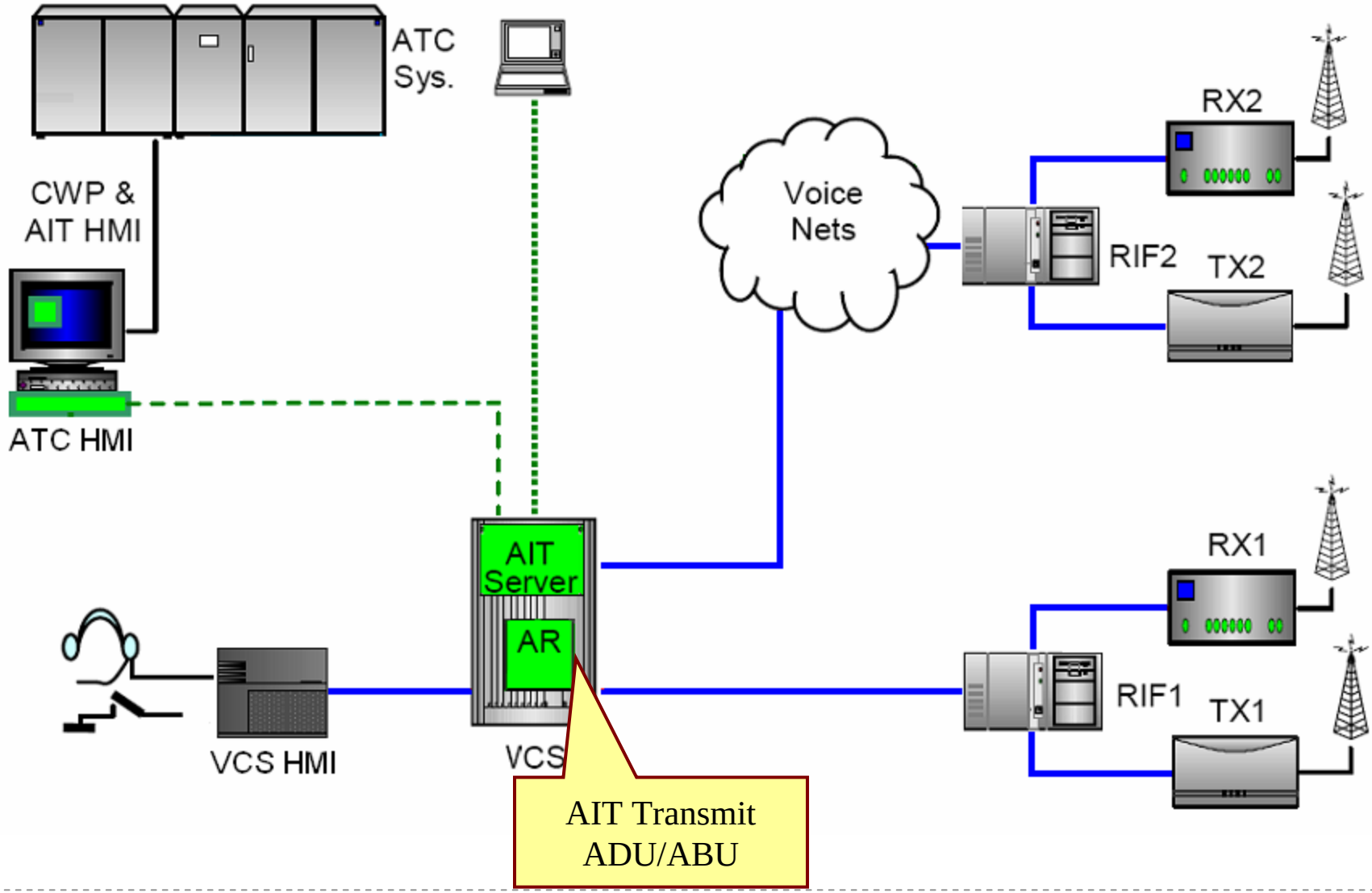

Conclusions (1)

- AIT Operational Concepts applies to AIT as well as any other in-band solution
  - A combination of several technologies is feasible and may be required to achieve performance/capacity required by [OC1]+[OC2]+[OC3] applications
- Airborne “Headset option” for an early implementation of [OC1] based on retrofit feasible
- “Integrated” airborne AIT implementation for [OC2],[OC3] needed requires adaptation of airborne equipment

Conclusions (2)

- “Stand-alone” ground VCS option for an early implementation of [OC1] based on retrofit
- New VCSs can integrate AIT components within VCS components
- Displaying AIT data on the ATC HMI: preferred choice!
- With defined VCS – ATC system interface no separate AIT ground equipment is required

Conclusions (3) – Next Steps

→ Additional research:

- Further development of prototype AIT system to increase capacity
- Assessment of impact of AIT signal upon voice
- AIT robustness to overlapping audio streams from other airborne voice systems
- Impact of AIT signal upon HF communications
- Impact of uplink AIT signal upon SELCAL signal
- AIT behavior with CLIMAX voice practice in European Airspace
- AIT coexistence with digital transmission within some GA architectures
- Alignment of AIT operational coverage with voice coverage
- Selection of the DSP platforms suitable for AIT