Communications, Navigation, and Surveillance Models in ACES

Design Implementation and Capabilities

I-CNS Conference

May 1st through 3rd, 2006

Presenter – Greg Kubat (Analex Corp.)

Authors: Greg Kubat (Analex Corp.), Don Vandrei (NASA GRC), Goutam Satapathy (Intelligent Automation, Inc.), Anil Kumar (CNS, Inc.), Manu Khanna (Comptel, Inc.)

GRC Project Objectives and Teaming

Annual Project Objectives

- FY04: CNS Model Development
- FY05: Design / Integration of baseline set of CNS Models into ACES
- FY06: 1) Integrate Enhanced CNS Simulation Capabilities in ACES
  2) Design and Integration of New Technology CNS Models
- FY07: Continue with CNS Model Integration / Possibly Address Concept Evaluations

Project Team

NASA GRC - Project Management / Test and Verification
Analex Corp. - System / Model Integration Engineering
Intelligent Automation Inc. - System Design / Software Development
CNS Inc. - CNS Model Design / Model Integration
RSIS Inc. - Software Configuration Management

Presentation Objectives

Overview of the ACES/CNS System Models Design and Integration

Configuration Capabilities available for Models and Simulations using ACES with CNS Modeling

Descriptions of recently added, Enhanced CNS Simulation Capabilities

General Concepts Ideas that Utilize CNS Modeling to Enhance Concept Evaluations

ACES – CybeleProtm Agent Based Environment

CybelePro Agent Framework

- Agents – Distributed, Autonomous, Interactive Components
- Agents Communicate with other Agents to Share Information and Coordinate Activities

Agent-Activity Relationship

- Activities perform functions within the context of their associated Agent
- Activities publish and subscribe to ACES messages

Publish-Subscribe Paradigm

- Messages are published to Tags to identify message type
- Messages are received by the Agent-activities who subscribe to those Tags

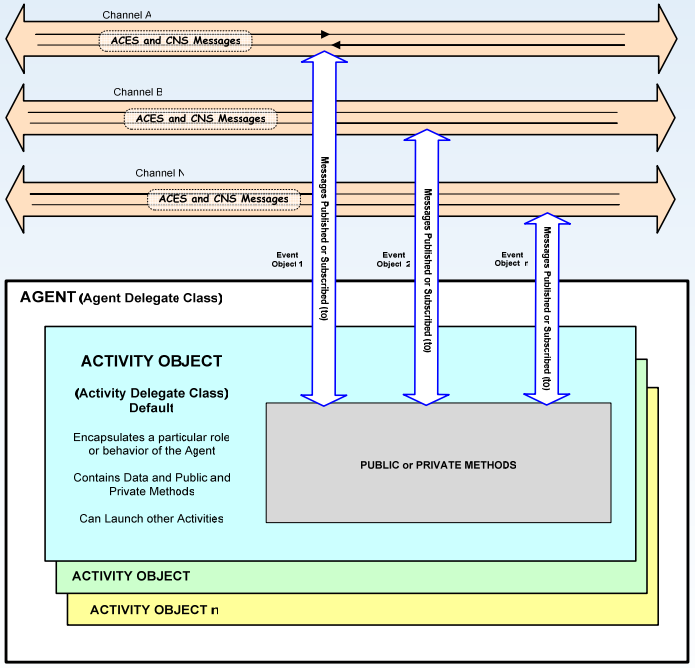

Changes to ACES Required for CNS Models

- Modified ACES 1 sec clock to 1 millisecond
- Addition of a CNS Forwarder to capture / re-tag (redirect) CNS related messages

Communication Models - Implementation

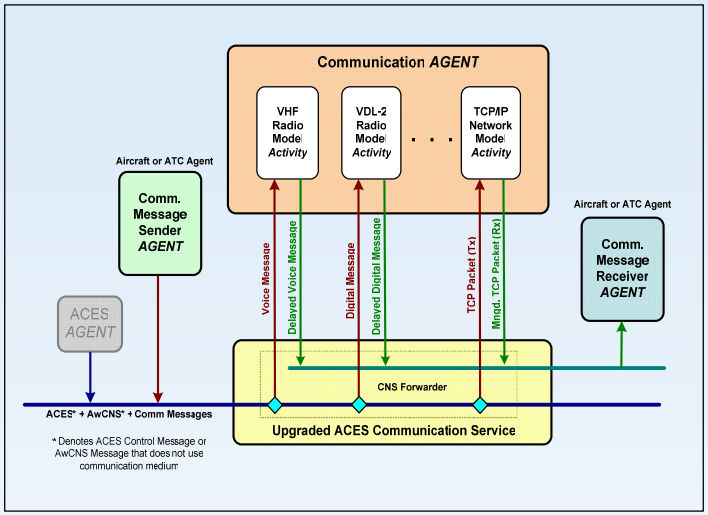

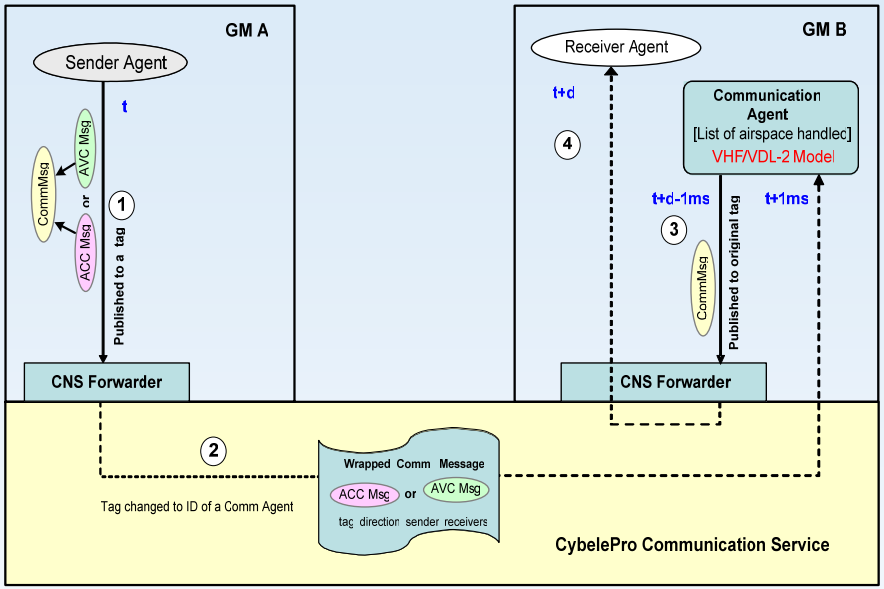

Communication Agent Design

- **Contains Communication Voice and data link model activities**
- **Models apply radio characteristics, use model protocol, determine interference and use GS proximity for delivery of each message**
- **Model determines successful delivery or if retransmission is required.**
- **Logs message statistics (i.e. delays, duration, timestamps, other stats.)**

Voice and CPDLC Message Process in ACES

1) Voice or Data link message sent by Sender Agent

2) CNS Forwarder/Comm. Service intercept and re-Tags (wraps) each message for delivery to appropriate communication model.

3) Comm. Model publishes Messages to Receiver Agent

4) Receiver Agent Receives message

Surveillance Models - Implementation

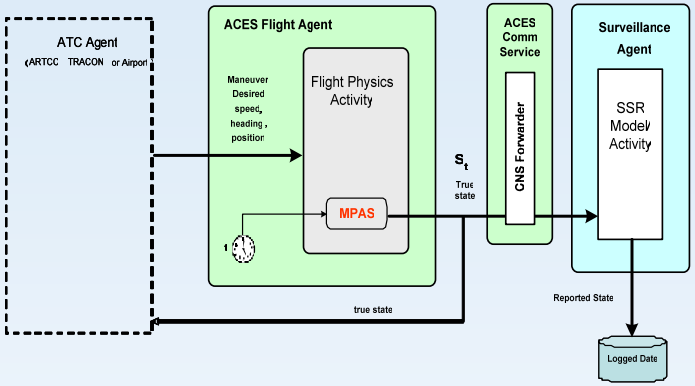

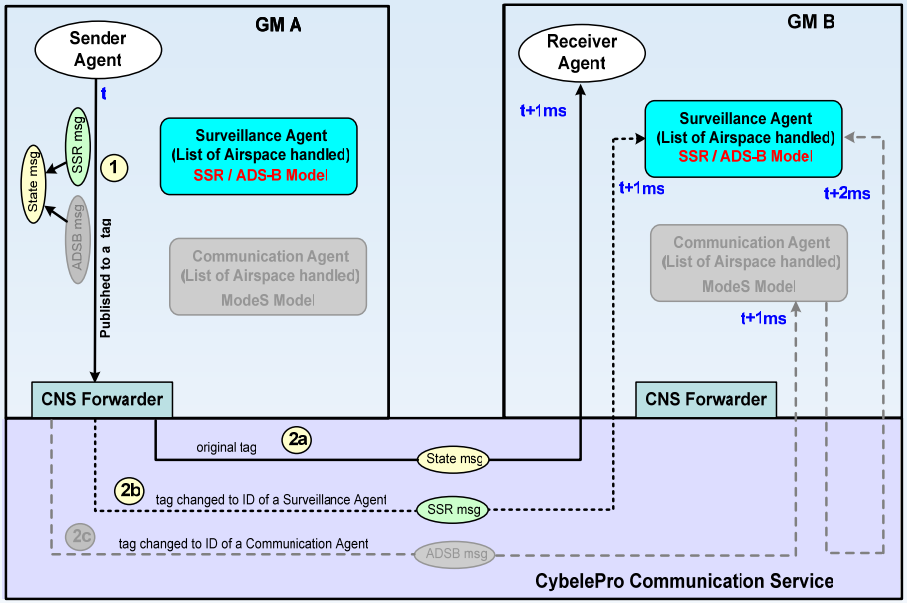

Surveillance Agent Design

- **Surveillance Agent contains Surveillance model Activities**
- **SSR model receives Flight Agent state messages and applies model processing.**
- **Logs position statistics (i.e. reported position (Lat/Long) and timestamp)**

Surveillance Message Process in ACES

1) State message published by Flight Agent

2a) Message received (subscribe to) by ACES Agent

2b) State Message retagged (wrapped) for SSR activity – processed for new reported position

Navigation System Models - Implementation

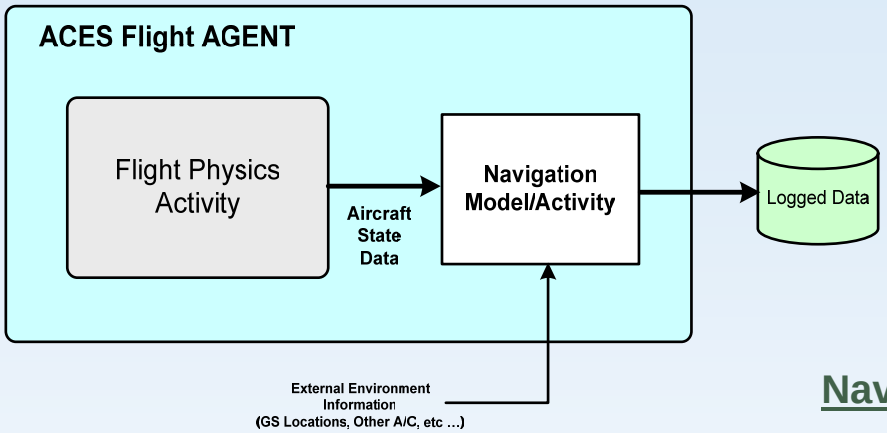

Navigation Model Design

- Inherently Onboard Systems
- Navigation Models implemented as Flight Agent Activities
- Use ACES Flight Agent state message Lat/Long as Input
- Log reported position, slant range data and timestamp as output.

Navigation Message Process in ACES

- Navigation Models Receive input (Lat/Lon) by subscribing to ACES Flight Agent, State messages. (true Lat/Long)
- For VOR/DME input is provided for Ground Station locations for Slant Range determination
- New reported position statistics logged in output data files

ADS-B Surveillance Model – Implementation

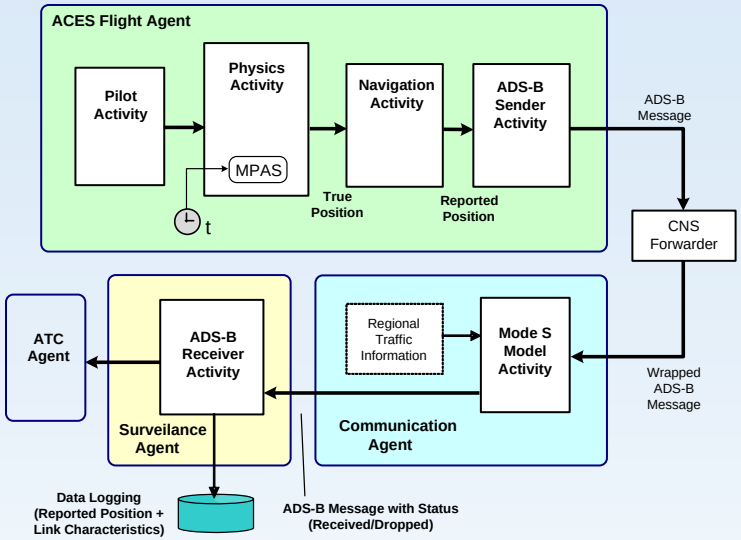

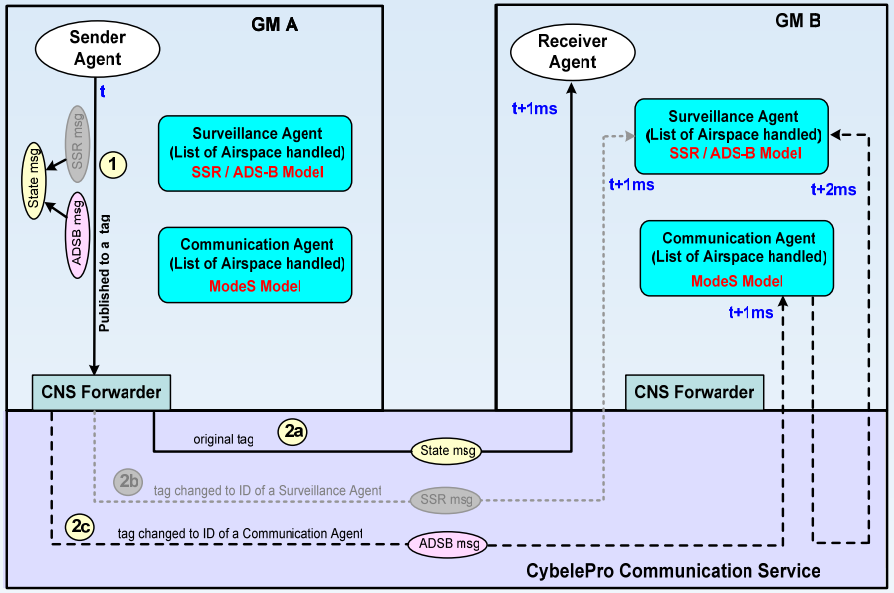

ADS-B System Model Design

- System model used similar model designs from previously design models
- Delivers position, speed, heading and altitude data (1/Sec, A-G only)
- Uses Mode S Model – delivery probability
- Position data (lat/long) provided by Navigation model (ADS-B Sender Activity)
- Speed, Heading, Altitude data is from Flight Agent
- Logs output data

ADS-B Message Process in ACES

1) ADS-B Model receives data from Nav Model used for the flight.

2) CNS Forwarder publishes messages to Comm Agent / Mode S model

3) Mode S model determines probability of successful transmission

4) Successful message published to Surv Agent

Simulation / Model Configuration

ACES Multiple Run Manager Interface provides Access to ACES Configuration GUI

ACES GUI Tabs continue to be used to Configure ACES Simulation for Flight Data Set selection and NAS Agent configuration

ACES GUI Modified with Communication, Navigation and Surveillance Tabs

- **Enable / Disable C, N or S Modeling for a simulation**
- **Set Airspace Regions where C, N or S Modeling will be active.**
- **Identify new, user-derived configuration files as options to default configuration files.**
- **Enable/Disable Enhanced C, N or S Simulation options**
- **Selection of C, N or S Model to be used in a simulation.**

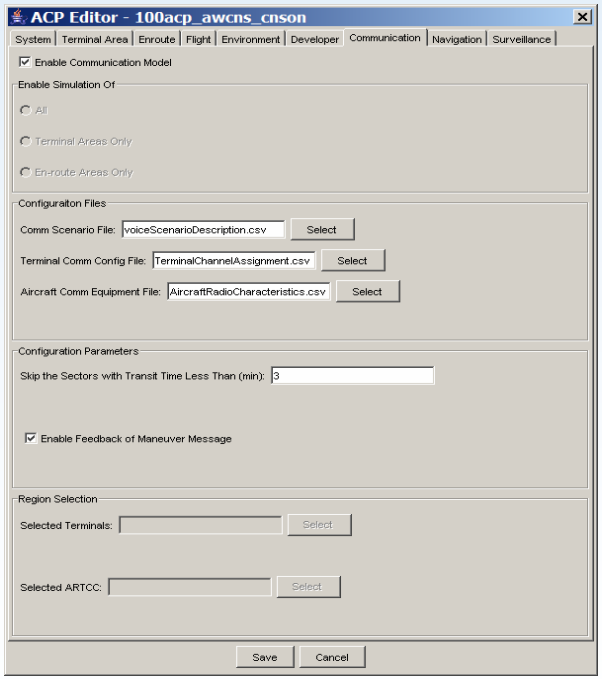

Simulation / Model Configuration (cont.)

Configuration files are provided for Model Input Parameters, Model Operating Parameters and Radio Tower Locations – all User Configurable

CommunicationScenarioDescription.csv

(Message Information for Voice and CPDLC – Created from single-flight Voice Radio Script)

Data Parameters: Message Type, Message Set, Message Text, Datalink Command Duration, Length (Digital message), Acknowledgment Flag, Waiting Time for Retransmission, Number of Retransmission Attempts, Transmission Start-time, Reference Time, Reference Message, Reference Message Direction.

CommunicationSystemSelectionByMessageSet.csv

(Comm. Model choice for flight-segment specific, message sequence transmission.)

Data Parameters: Message Set (with message type description), Communication System (VDL-2 or Voice)

AircraftCommunicationEquipment.csv and ***AircraftSurveillanceEquipment.csv***

(Aircraft Radio Equipment operating parameters for Communication Models)

Data Parameters: Aircraft Model, Airline, VDL2 Equipment (Y/N), Mode-S Equipment (Y/N), VHF Radio/VDL-2 Radio/ModeS Radio: 1) Transmitter Power Level, 2) Receiver Sensitivity, 3) Transmit Antenna Gain, 4) Receiver Antenna Gain, 5) Loss in the transmitter, and 6) Loss in the receiver

<Sector Name>_<H-High or L-Low or S-Super>_VC_GS.csv

(VHF Radio Ground Station Configuration Files)

Data Parameters: NAS Facility ID, NAS Facility Type, Transmitter Power Level, Receiver Sensitivity, Location of the Tower (Note: Default mapping of VHF Radio towers locates GS at the geographical center of each sector.), Transmit Antenna Power Level, Receiver Antenna Gain, Loss in the transmitter, Loss in the receiver

Simulation / Model Configuration (cont.)

VDL2RadioGroundStationConfiguration.csv

Data Parameters: Ground Station ID, Frequencies, Location of the Tower, Transmitter Power Level, Receiver Sensitivity, Transmit Antenna Level, Receiver Antenna Gain, Loss in the transmitter, Loss in the receiver

ModeSGroundStationConfiguration.csv

Data Parameters: Ground Station ID, Location of the Tower, Transmitter Power Level, Receiver Sensitivity, Transmit Antenna Level, Receiver Antenna Gain, Loss in the transmitter, Loss in the receiver

VDLMode2ModelParameters.csv

Data Parameters: VME TG1 Timer, VME TG2 Timer, VME TG5 Timer, DLE Window Size, DLE N2 Counter, DLE N1 Parameter, DLE T4 Timer, DLE T2 Timer, MAC T1 Timer, and MAC T2 Timer

ModeSModelParameters.csv

Data Parameters: Broadcast Rate of ADS-B messages, Broadcast Rate of TCAS messages, Broadcast Rate of SSR Messages

TerminalsForCommunications. ARTCCForCommunications, TerminalsForSurveillance ARTCCForSurveillance, TerminalsForNavigation, ARTCCForNavigation

Data Parameters: TRACON ID's or ARTCC's that will be in operation for a simulation for Communication, Surveillance or Navigation (respectively).

NavigationTopology.csv *(Used for VOR/DME)*

Data Parameters: Navaid Facility ID, Navaid Location, Navaid Altitude

Enhanced Capabilities - Voice Communication Activated Maneuvers

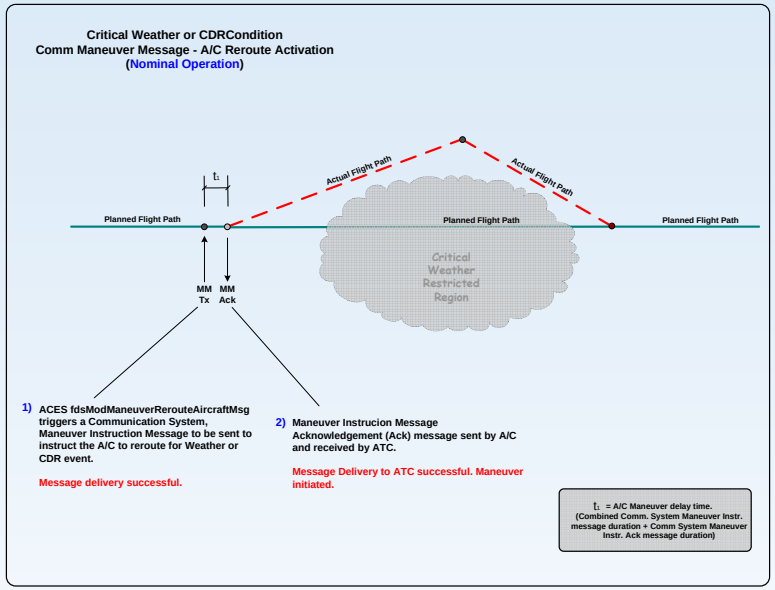

Communication Message Activated Maneuver (Default Operation)

- ACES Maneuver Message are directed to a flight to perform a maneuver
- ACES Message Intercepted & Voice Msg is sent to instruct the aircraft maneuver
- Aircraft acknowledges maneuver instruction w/acknowledgement Msg
- Aircraft maneuver initiated

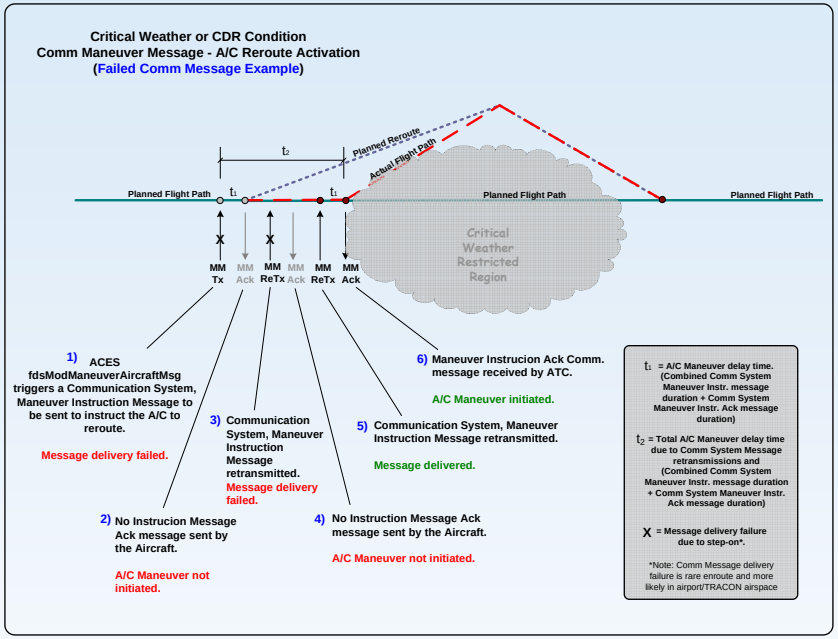

Communication Message Activated Maneuver (Msg Retransmissions Required)

- Voice instruction or acknowledgement for maneuver requires retransmission due to step-on or interference
- Delays the aircraft from receiving the instruction for the maneuver

Enhanced Capabilities – Extended Frequency Assignments

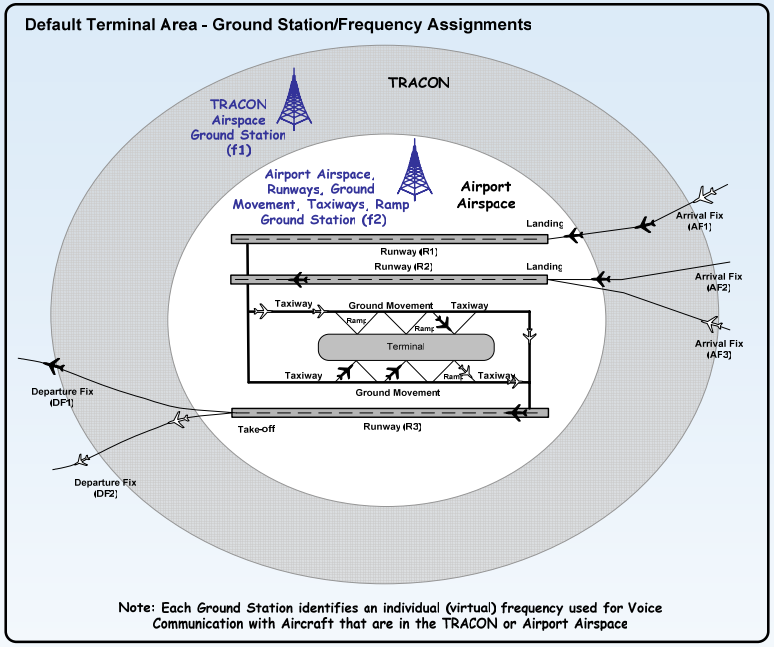

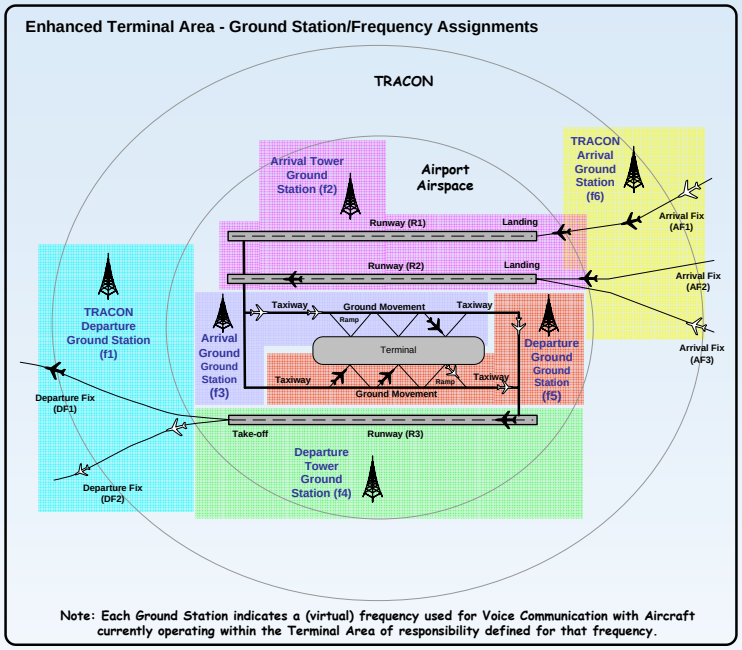

Default Airport Airspace Frequency Assignments

- **Two Radio Towers used as VHF radio frequencies/channels at each airport**
  (1 Airport, 1 TRACON)
- **Baseline approach - sufficient for simulation purposes**

Upgraded Airport Airspace Frequency Assignments

- **ACES provided enhanced Airport terminal definition for Chicago (ORD) and Newark (EWR) airports (Late FY05)**
- **Provides the opportunity to distinguish various airport operations**
- **Default for ORD & EWR includes Gate/Ground, Taxiway/Landing/Takeoff and TRACON for Arrival & Departure**

Enhanced Capabilities – Short Sector Transition Frequency Handoff

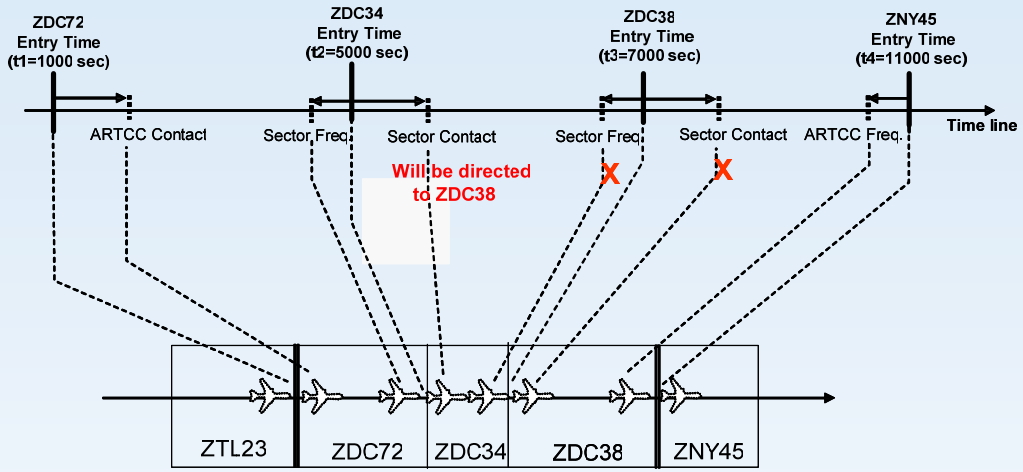

** User Defined Sector Transit Time = 2500 sec

Eliminates unnecessary ATC Freq. Handoff message sequences for en-route Sector Transitions

- **Default Communications will simulate a frequency handoff message sequence for all Centers/Sector transitions**
- **Short Sector transition enhancement enacted based on ARTCC visit to ZOB (May 05)**
- **Controllers do not provide new frequencies for short sectors operations. Take responsibility for known short sector on current frequency.**
- **Enhancement improves reality of ATC/Pilot Communications**
- **User selectable – Transition Time Setting determines skipped segment Decisions**

Enhanced Capabilities – Navigation Closed Loop

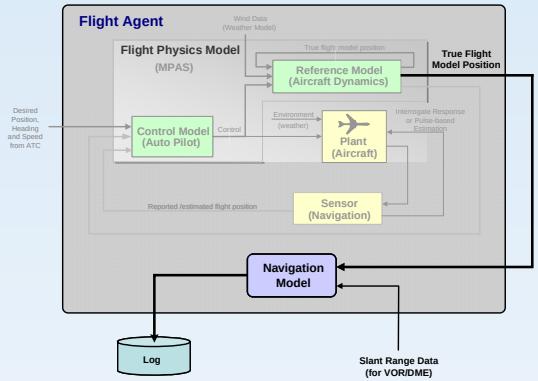

Open Loop

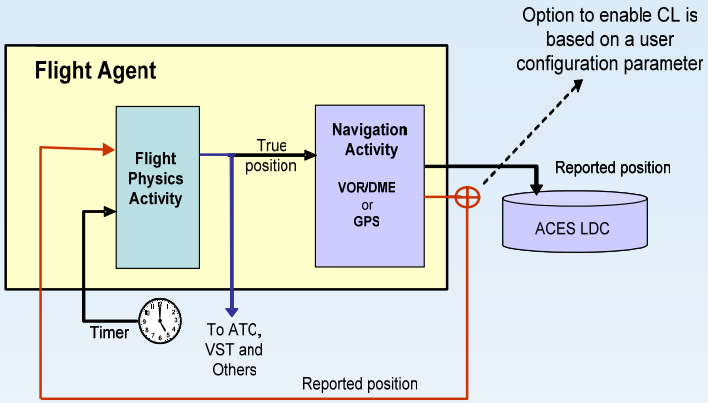

Closed Loop - Agent/Activity Operation

Closed Loop

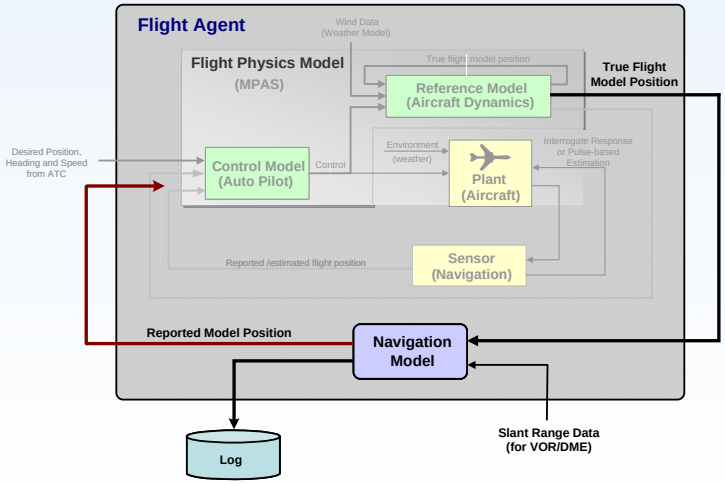

Upgraded for Navigation Model Position Feedback

- **Provides non-ideal position to Flight Agent from Navigation model.**
- **Provides the effect of a non-ideal flight path on flight times for fuel consumption evaluations or spacing for separation studies. (Pilot/autopilot – view).**
- **Could be most useful in congested airspace**

Enhanced Capabilities – Surveillance Closed Loop

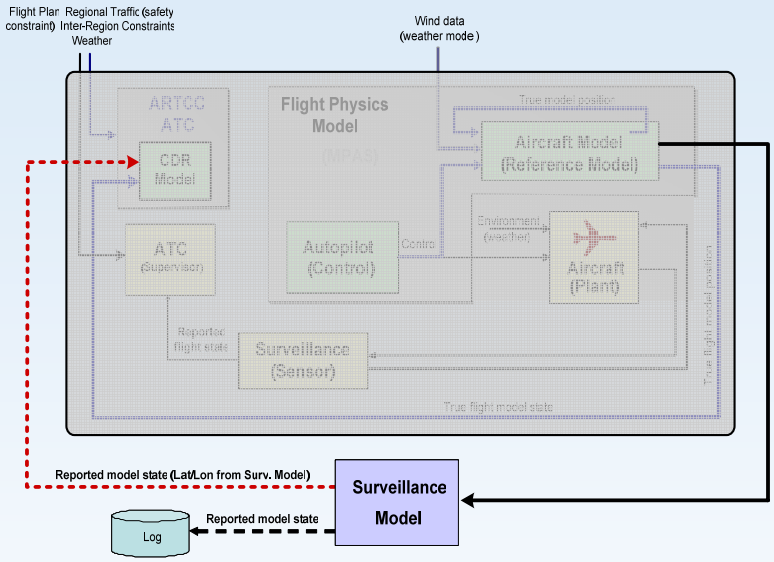

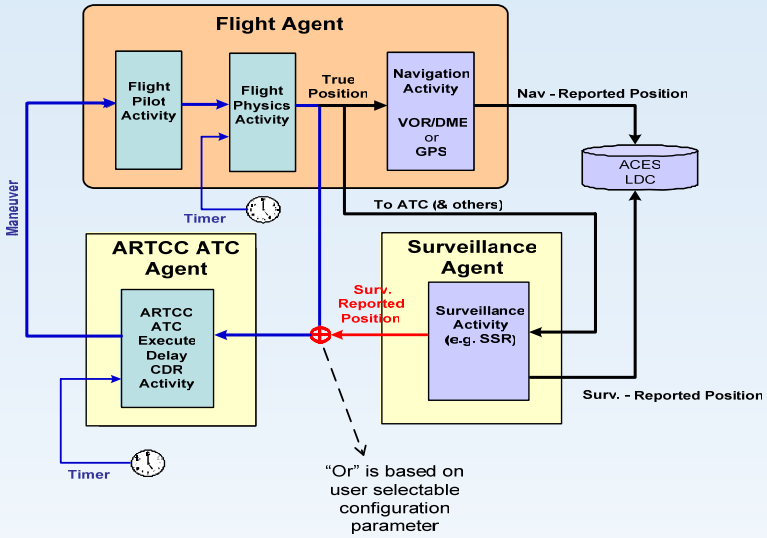

Upgraded for Surveillance Model Position Feedback

- **Provides non-ideal position to ATC Agents from Surveillance System model.**
- **Provides the effect of a non-ideal (ATC-view) for ATC Agent decisions for directed maneuvers.**

New Concept Types or added Evaluation Capability

Air Traffic Controller Workload Assessments

- **Evaluate Critical Airspace (Airport Airspace) or Gate-to-Gate (including en-route airspace) operations for ATC voice communication workload**
- **Evaluate use of CPDLC with Voice communication (Mixed Mode)**

Flight Track Accuracy / Aircraft Spacing Concepts

- **Use Navigation System Models to perform more informative assessments of concepts designed to provide more efficient aircraft spacing.**
- **Use Closed Loop Navigation to determine how varied Navigation systems could affect aircraft fuel consumption.**

Architecture Performance Concepts

- **Combine Several CNS system models to evaluate general NAS infrastructure performance.**
- **Enable Navigation and Surveillance system closed loop and vary the N & S systems to assess the effect varied system accuracies have on reported CDR events.**
- **Enable Closed Loop Navigation with Communication Activated Maneuvers to assess the impact of delayed maneuver initiation and non-ideal maneuverability for increasingly congested airspace.**

CNS Modeling can be run to enhance any Concept Simulation