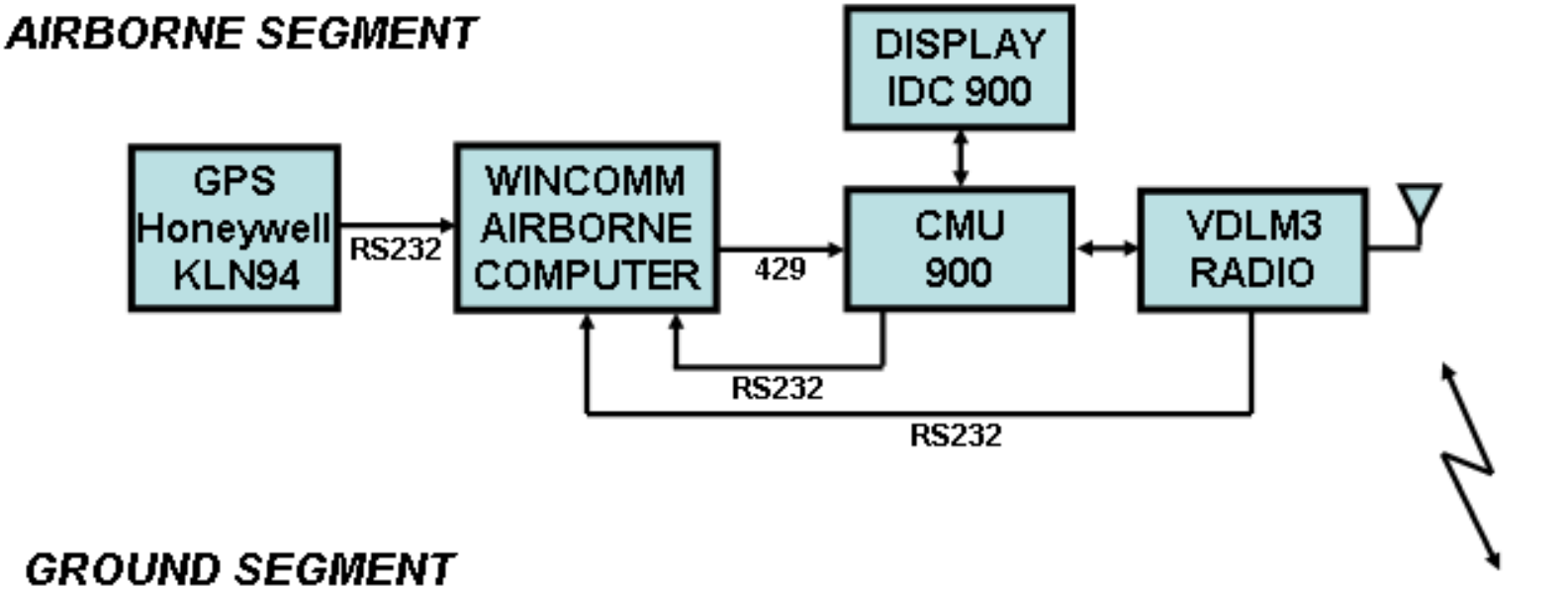
AIRBORNE SEGMENT
DISPLAY IDC 900
GPS Honeywell KLN94
RS232
WINCOMM AIRBORNE COMPUTER
429
CMU 900
VDLM3 RADIO
RS232
RS232

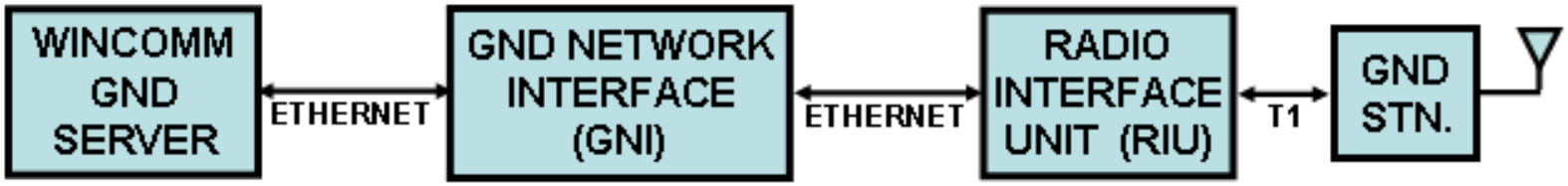
GROUND SEGMENT
WINCOMM GND SERVER
ETHERNET
GND NETWORK INTERFACE (GNI)
ETHERNET
RADIO INTERFACE UNIT (RIU)
T1
GND STN.

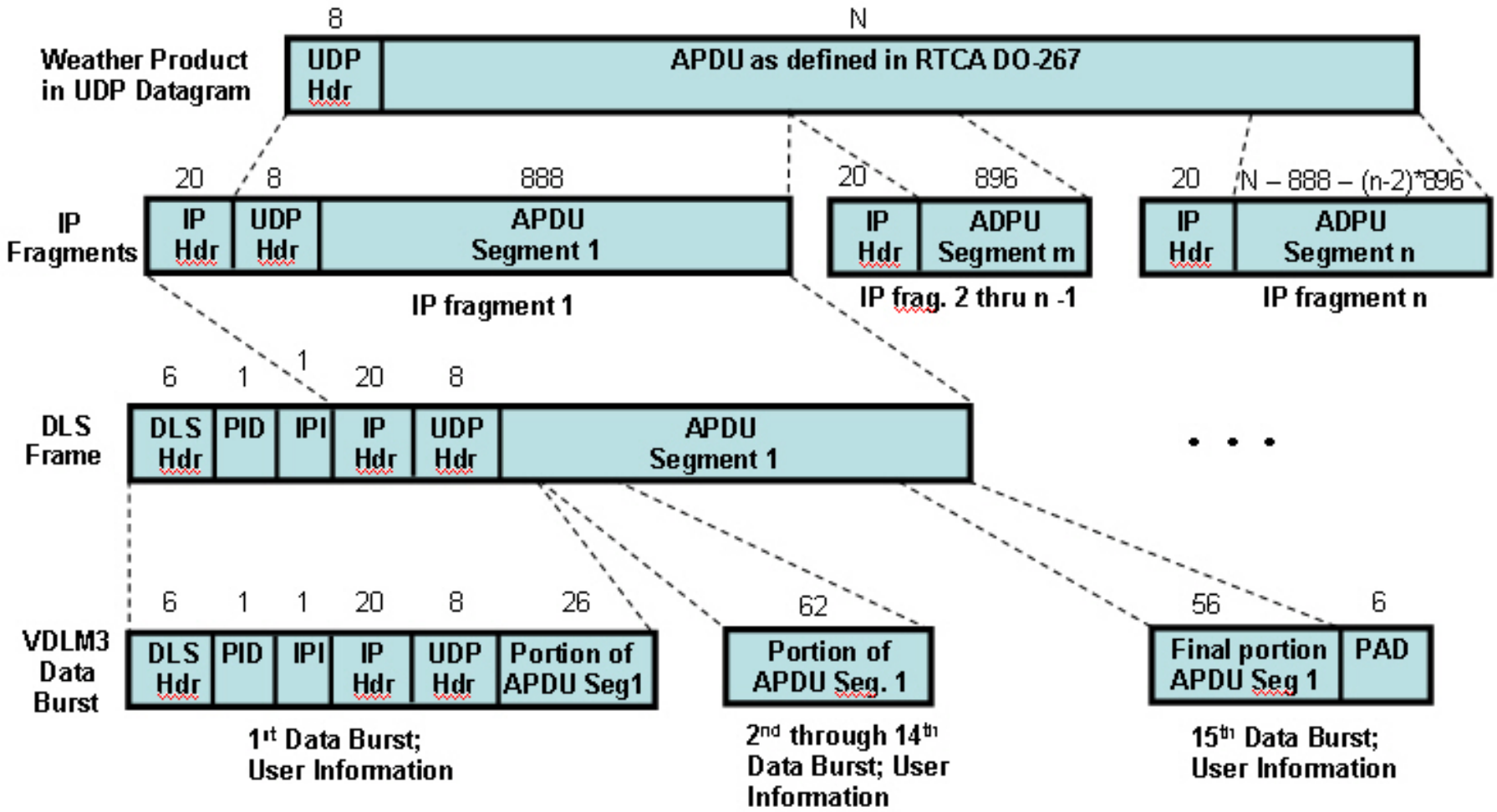

1. Values are based on IP MTU = 922 bytes = (54 + 14*62).
2. PID = 0x40 and IPI = 0xCC indicates an IPv4 Datagram.

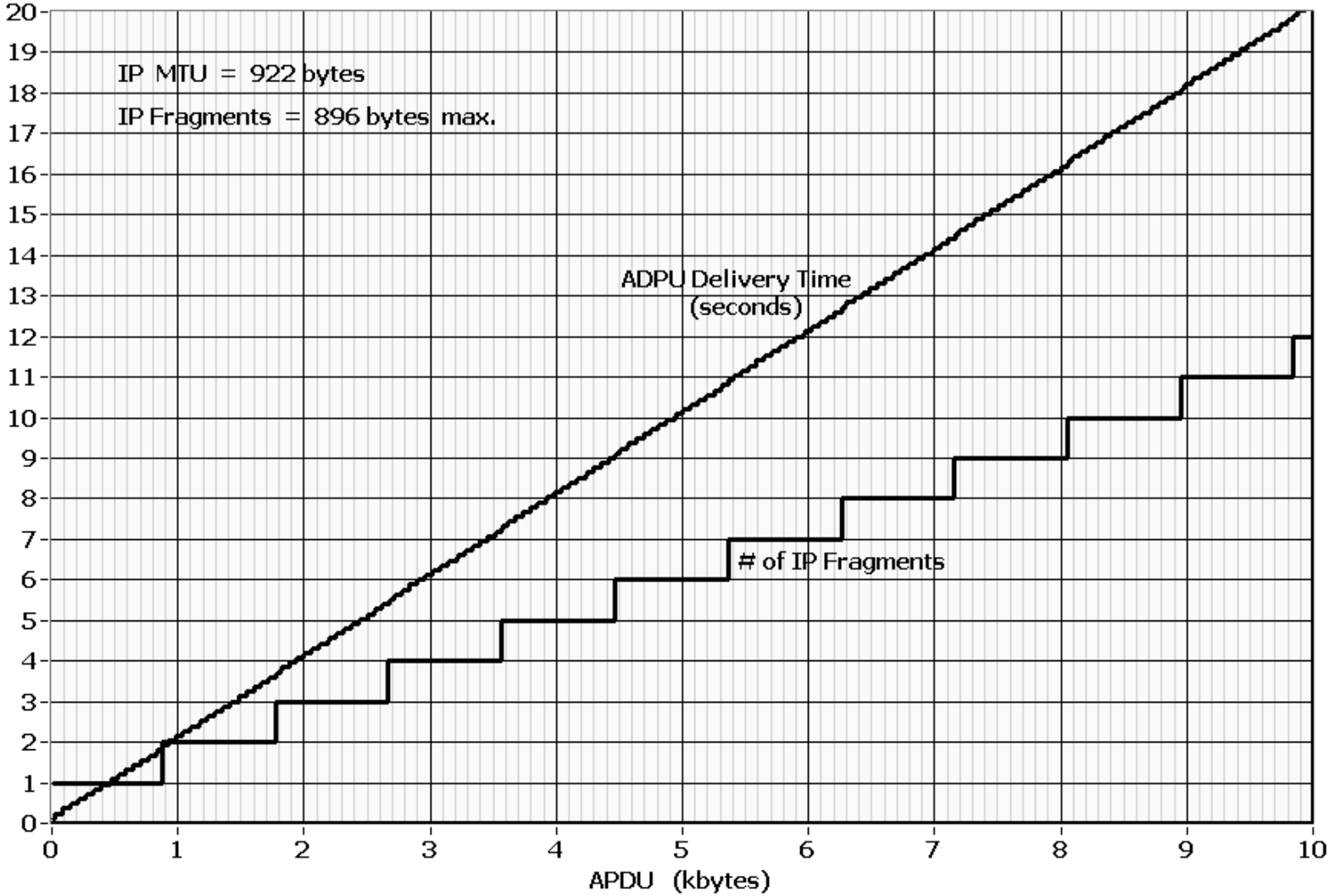
IP MTU = 922 bytes
IP Fragments = 896 bytes max.
ADPU Delivery Time
(seconds)
# of IP Fragments
APDU (kbytes)
0
1
2
3
4
5
6
7
8
9
10
11
12
13
14
15
16
17
18
19
20

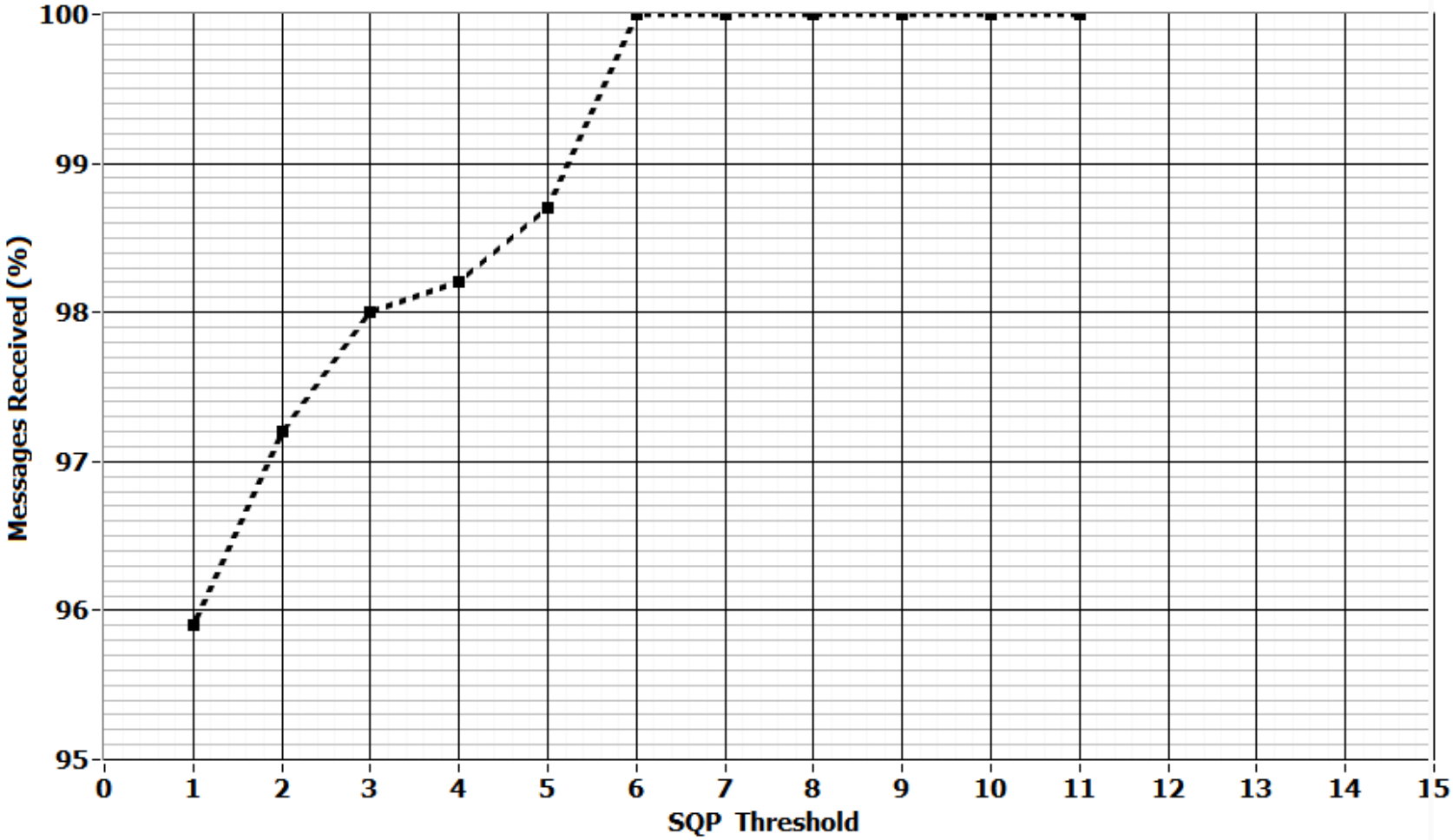
100
99
98
97
96
95
Messages Received (%)
0
1
2
3
4
5
6
7
8
9
10
11
12
13
14
15
SQP Threshold

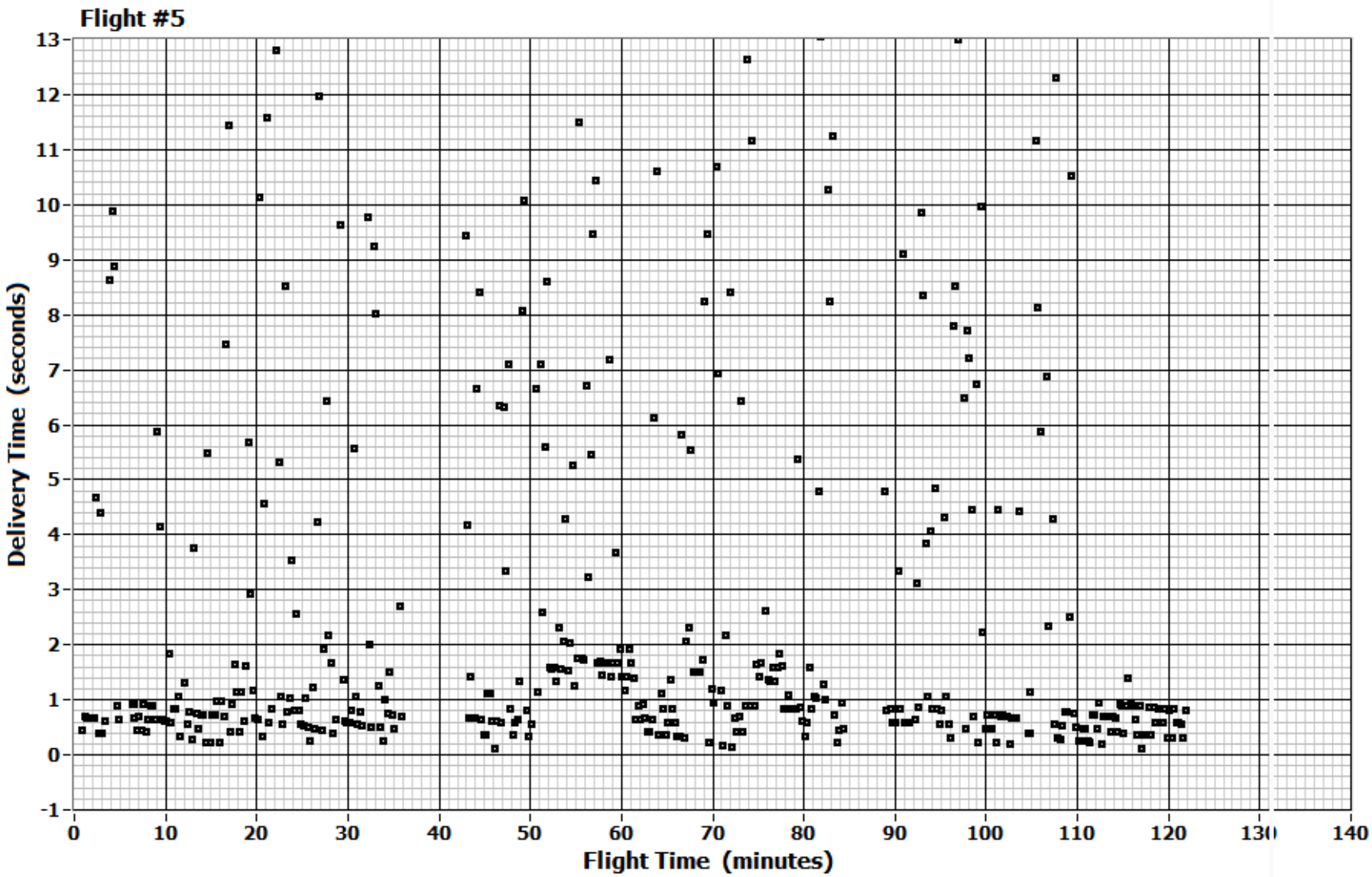
Flight #5
Delivery Time (seconds)
Flight Time (minutes)
13
12
11
10
9
8
7
6
5
4
3
2
1
0
-1
0
10
20
30
40
50
60
70
80
90
100
110
120
130
140

	Flt. #2	Flt. #3	Flt. #4	Flt. #5
TTMs Sent	136	122	217	444
TTMs Rec'd.	136	122	217	444
TTMs Lost	0	0	0	0
Retransmissions:				
at the TCP layer	5	6	20	34
at the DLS layer	55	32	49	93

Table 6. TCP messaging of the turbulence messages.